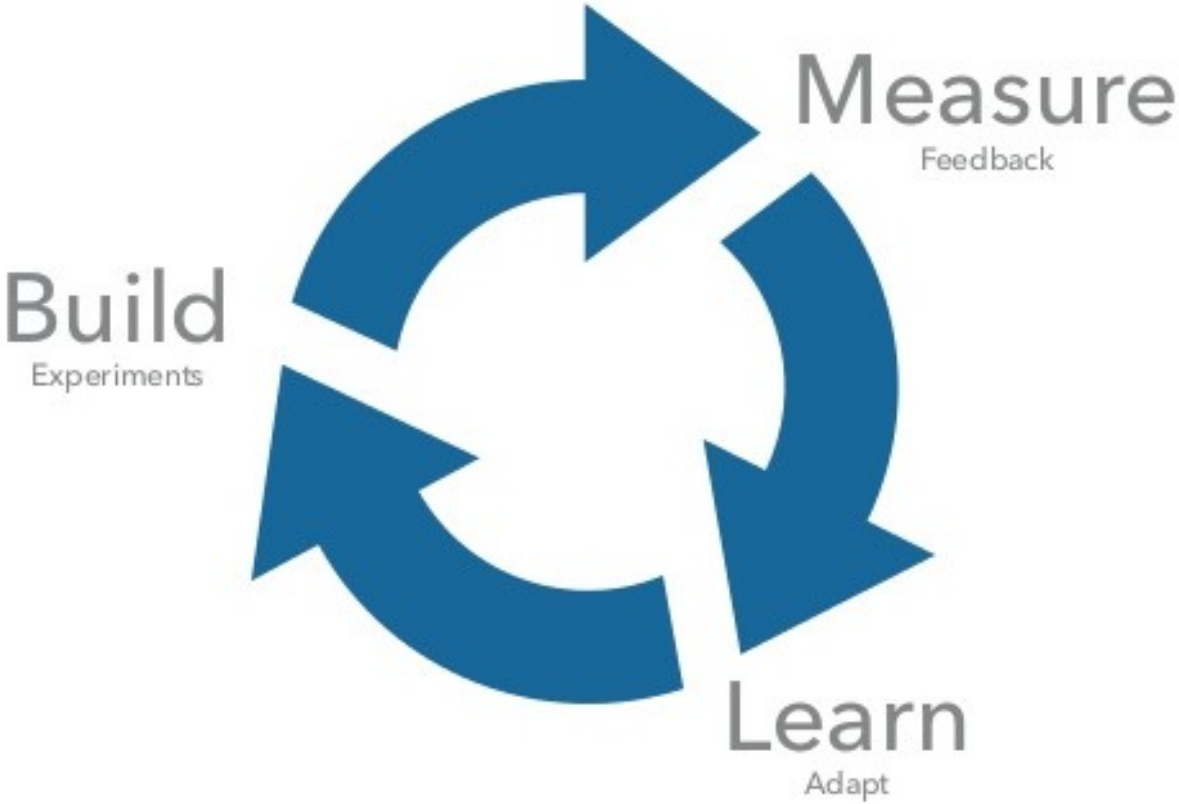
Measure
Feedback
Build
Experiments
Learn
Adapt

CANADA
WASHINGTON
OREGON
IDAHO
MONTANA
NORTH DAKOTA
SOUTH DAKOTA
MINNESOTA
WISCONSIN
MICHIGAN
WYOMING
NEVADA
UTAH
CALIFORNIA
COLORADO
NEBRASKA
IOWA
KANSAS
MISSOURI
ILLINOIS
INDIANA
OHIO
KENTUCKY
WEST VIRGINIA
PENNSYLVANIA
NEW YORK
MAINE
VERMONT
NEW HAMPSHIRE
MASSACHUSETTS
RHODE ISLAND
CONNECTICUT
NEW JERSEY
DELAWARE
MARYLAND
VIRGINIA
NORTH CAROLINA
SOUTH CAROLINA
TENNESSEE
ARIZONA
NEW MEXICO
OKLAHOMA
ARKANSAS
TEXAS
LOUISIANA
MISSISSIPPI
ALABAMA
GEORGIA
FLORIDA
PACIFIC OCEAN
ATLANTIC OCEAN
GULF OF MEXICO
MEXICO
THE BAHAMAS
CUBA
HAWAII
ALASKA
CANADA
Albers equal area projection

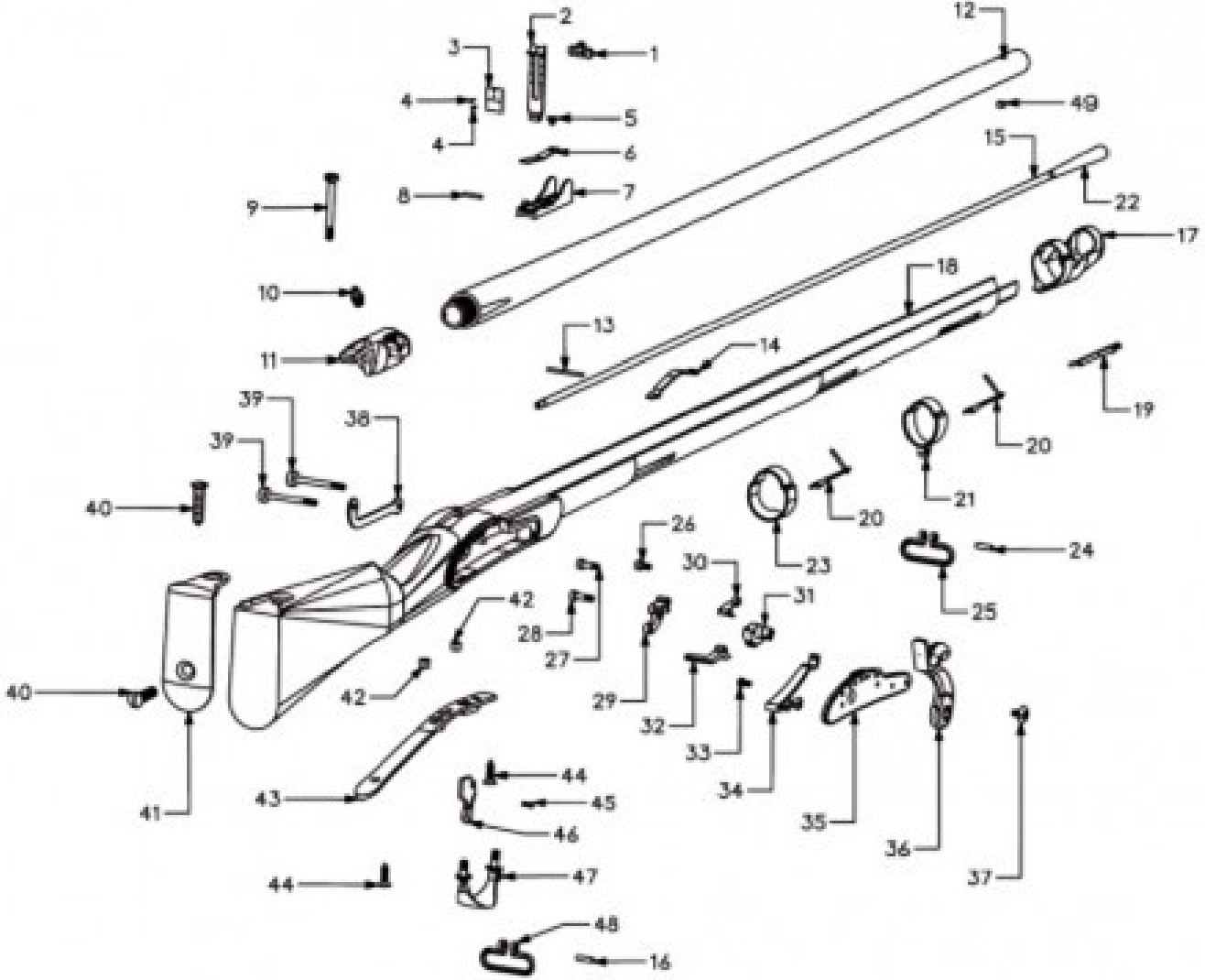
1
2
3
4
4
5
6
7
8
9
10
11
12
13
14
15
16
17
18
19
20
20
21
22
23
24
25
26
27
28
29
30
31
32
33
34
35
36
37
38
39
39
40
40
41
42
42
43
44
44
45
46
47
48
49

LEGO

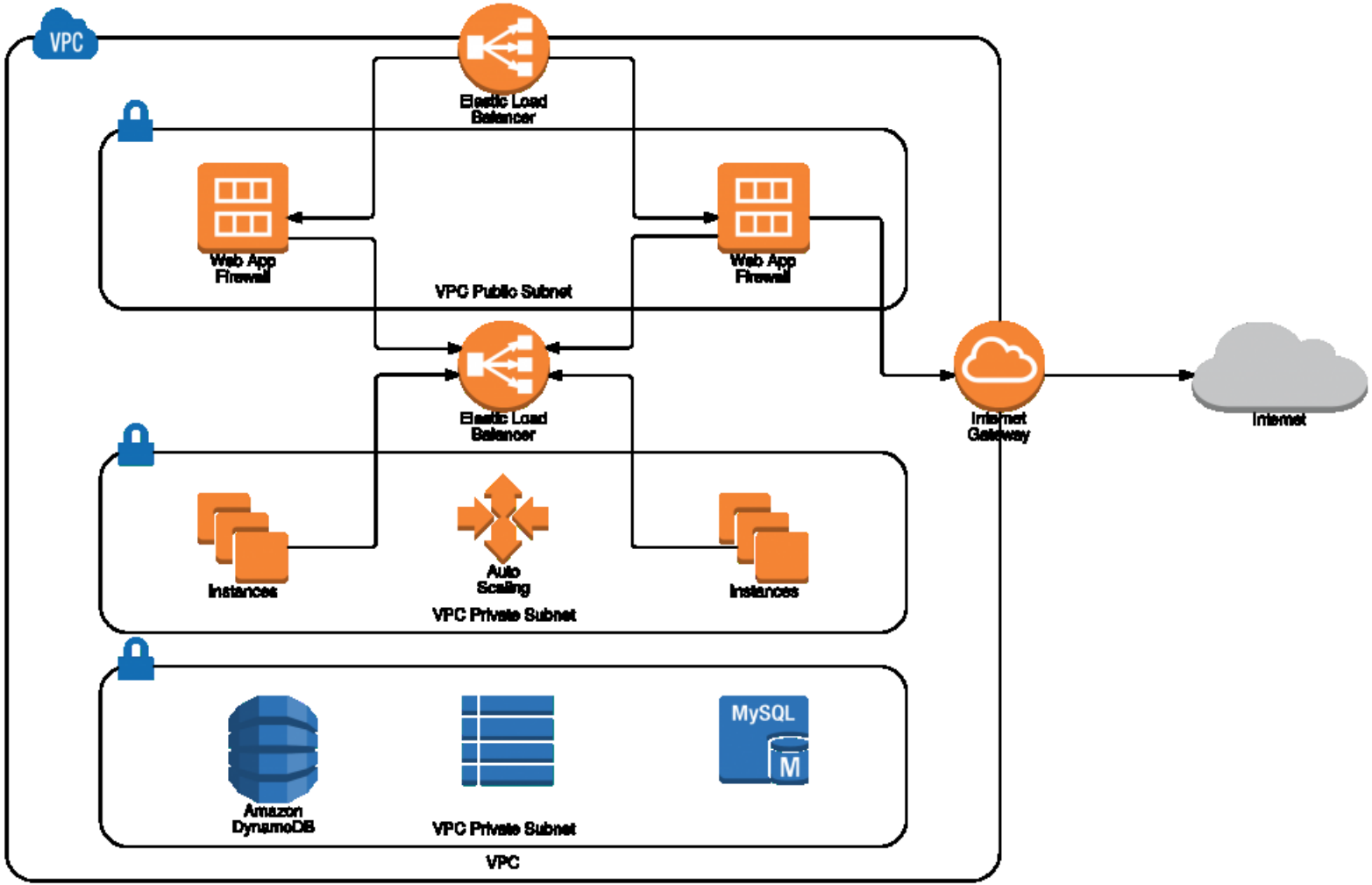
VPC
Elastic Load Balancer
Web App Firewall
Web App Firewall
VPC Public Subnet
Elastic Load Balancer
Internet Gateway
Internet
Instances
Auto Scaling
Instances
VPC Private Subnet
Amazon DynamoDB
VPC Private Subnet
MySQL
M
VPC